USB-RIM version 1B

Radio Interface Module

Specifications:

Power Source	+5v from USB buss
Low Pass Filter Cutoff Frequency (F_c)	Approx. 10KHz.
Audio Input Impedance	Approx. 10K Ohm
Maximum Audio Output Level	Approx. 14.5Vp-p
Audio Output Impedance	Approx. 100 Ohms
Output LPF Roll Off	-10 dB per octave
PTT Line Maximums	500mA @ 50V
Local Rpt. Line Maximums	100mA @ 50V

Hookup:

Connections between the RIM and a radio or repeater are made through a 25 pin male connector. (supplied) The pinout of the interface connector is as shown at right.

Most of the connections are self-explanatory to anyone familiar with common radio terminology. Please refer to our website for a list of currently available model-specific connection diagrams.

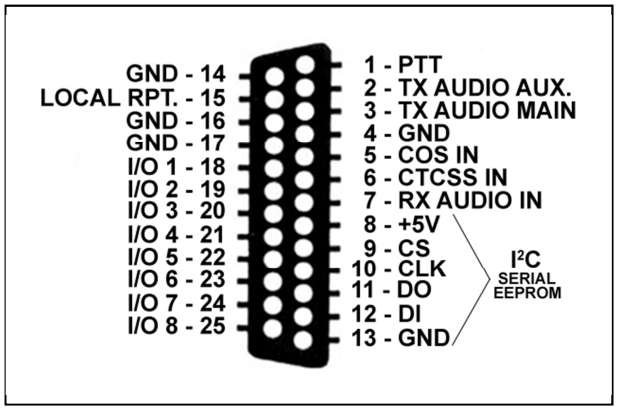

Board Setup:

There are MANY option jumpers provided on the RIM board. To access them, simply pry the two case halves apart using a small flat screwdriver or other appropriate tool.

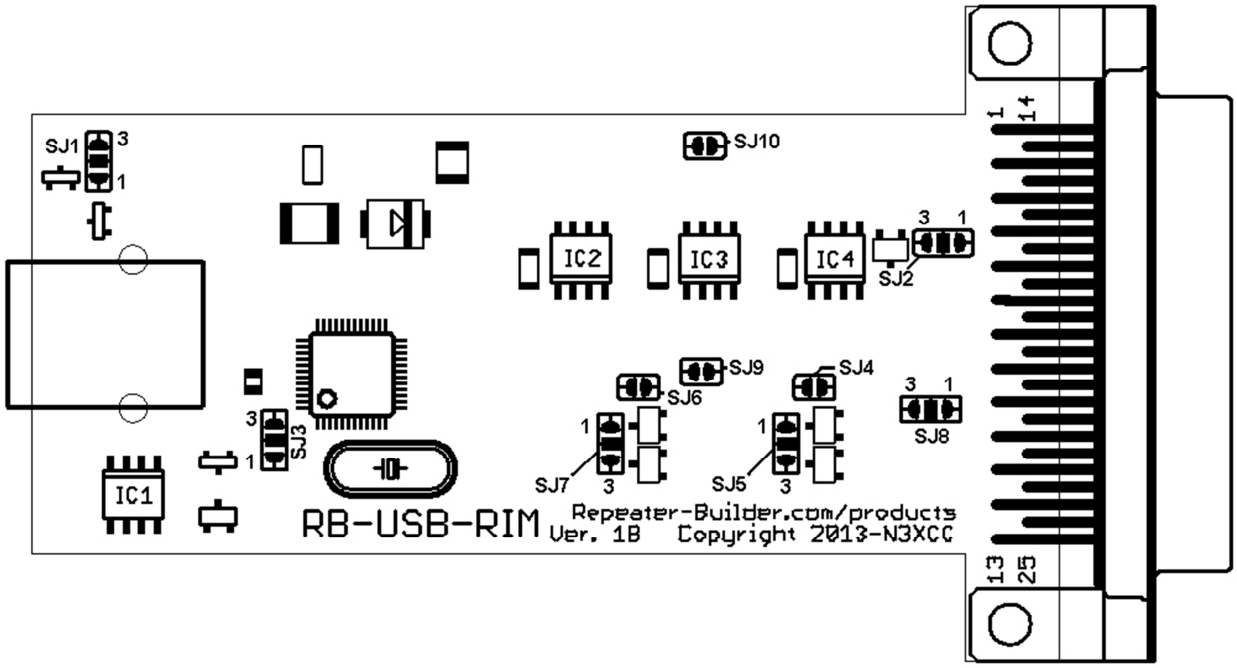

Board Setup: (continued)
Some jumpers are “single” jumpers in that they are either “in” or “out.” Some jumpers have two positions. They are configured by soldering between EITHER the #1 pad –or- the #3 pad, NOT both. The only jumper where *ALL* pads may be connected is SJ8, the Rx input attenuator jumper.

SJ1 – PTT Ground Reference – Dual position – *Shipped in the ‘3’ position*
Solder jumper SJ1 is used to select where the Push-to-Talk MOSFET obtains its ground. If the jumper is connected between the center and pad ‘1’, the PTT MOSFET will get its ground directly from the board. If the jumper is connected between the center and pad ‘3’, the PTT will get its ground from the ”PC Comms OK” output. Thus eliminating the possibility of the PTT being “stuck” low due to a PC USB communications failure.

SJ2 – PC Comms OK Output Polarity – Dual position – *Shipped not jumped*
Solder jumper SJ2 is used to select the output polarity of the “Local Rpt.” output pin. This pin may be connected to signal a repeater’s internal controller that external PC controller communications have failed and is no longer in control. Most “all-in-one” type repeater boxes have this functionality. Consult your equipment owner’s manual or our model-specific hook-up sheet for more information.

If the solder jumper is connected between the center and ‘1’, the “Local Rpt.” output pin will pull to ground when PC communications have failed. If the jumper is connected between the center and ‘3’, this pin will be pulled low when the RIM is successfully communicating with the PC.

SJ3 – PC Comms OK Input Source Selection – Dual position – *Shipped in the ‘1’ position*
Solder jumper SJ3 is used to select the input to the ”PC Comms OK” circuitry. For all AllStar based PC controllers, (ACID, XIPAR, etc.) this jumper should be installed from the center pad to the ‘1’ position. Some other PC based controllers (FreeStar) that use the CM119 IC’s GPIO1 pin will want this jumped between the center pad and position ‘3’.

SJ4 – CTCSS Input Pull-up Enable – Single position – *Shipped ‘open’*
Solder jumper SJ4 is used to connect a 10K pull-up resistor from 5V to the RIM’s CTCSS logic input. This is useful when the radio/repeater/controller’s CTCSS output is an “open collector” type output and will not source voltage. Short the pads of SJ4 to enable this pull-up.

SJ5 – CTCSS Input Polarity Selection – Dual position – *Shipped in the ‘1’ position*
Solder jumper SJ5 is used to select the input polarity of the CTCSS circuitry. If the CTCSS output of your radio/repeater/controller’s CTCSS output provides voltage or is “open collector” when a valid tone is being received, jump from the center to the ‘1’ pad. If the radio/repeater/controller’s CTCSS output goes to ground when a valid tone is being received, jump from the center to the ‘3’ pad. Also see SJ4 above for other options.

SJ6 – COS Input Pull-up Enable – Single position – *Shipped ‘open’*
Solder jumper SJ6 is used to connect a 10K pull-up resistor from 5V to the RIM’s COS logic input. This is useful when the radio/repeater/controller’s COS output is an “open collector” type output and will not source voltage. Short the pads of SJ6 to enable this pull-up.

Solder Jumpers: (continued)

SJ7 – COS Input Polarity Selection – Dual position – *Shipped in the '1' position*

Solder jumper SJ6 is used to select the input polarity of the COS circuitry. If the COS output of your radio/repeater/controller's COS output provides voltage or is "open collector" when a valid tone is being received, jump from the center to the '1' pad. If the radio/repeater/controller's COS output goes to ground when a valid tone is being received, jump from the center to the '3' pad. Also see SJ6 above for other options.

SJ8 – RX Audio Input Attenuator – Multi position – *Shipped not jumped*

Solder jumper SJ8 is the **ONLY** jumper that may have **ALL** pads jumped, depending on the amount of input attenuation desired. Solder pad '1' connects to a 10K resistor. Solder pad '3 connects to a 22K resistor. With these two resistor values in conjunction with the 22K input resistor, 4 values of attenuation are possible.

Jumper configuration	Net Loss
No jumpers shorted	0dB
Pad '1' shorted to center	~6dB
Pad '3' shorted to center	~10dB
Pads 1&3 shorted to center	~12.5dB

SJ9 – Main Audio Output Gain Reduction – Single position – *Shipped 'open'*

Solder jumper SJ9 shorts out a resistor in the feedback path of the final audio op-amp. This reduces the gain of the last amplifier stage from 2.5x down to 1x. This jumper (and associated gain reduction) *may* be needed when driving the microphone input of your radio/repeater/controller's audio chain. Consult your equipment owner's manual or our model-specific hook-up sheet for more information.

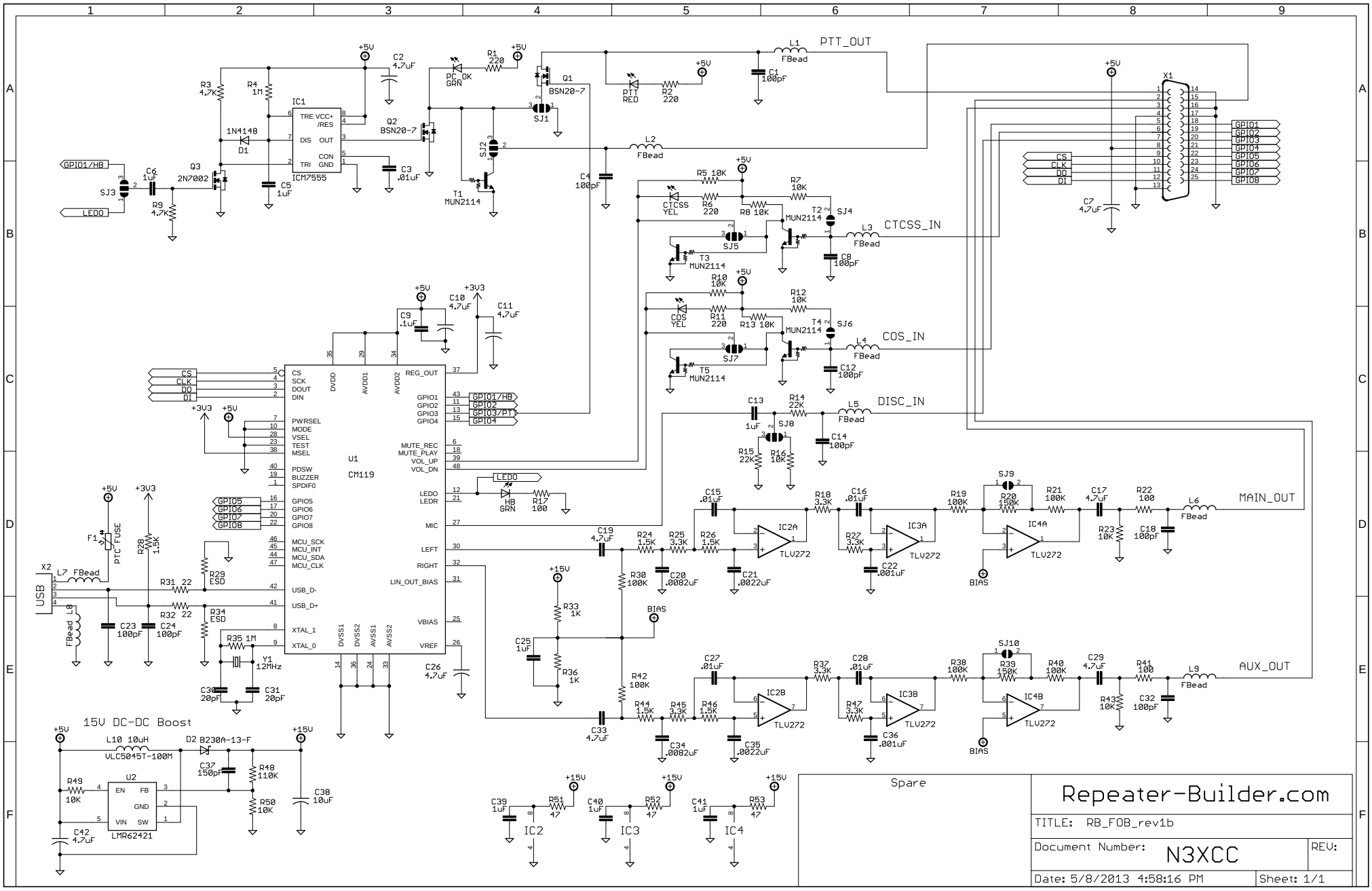
PTT_OUT
CTCSS_IN
COS_IN
DISC_IN
MAIN_OUT
AUX_OUT
15V DC-DC Boost
Spare
Repeater-Builder.com
TITLE: RB_FOB_rev1b
Document Number: N3XCC
REV:
Date: 5/8/2013 4:58:16 PM
Sheet: 1/1

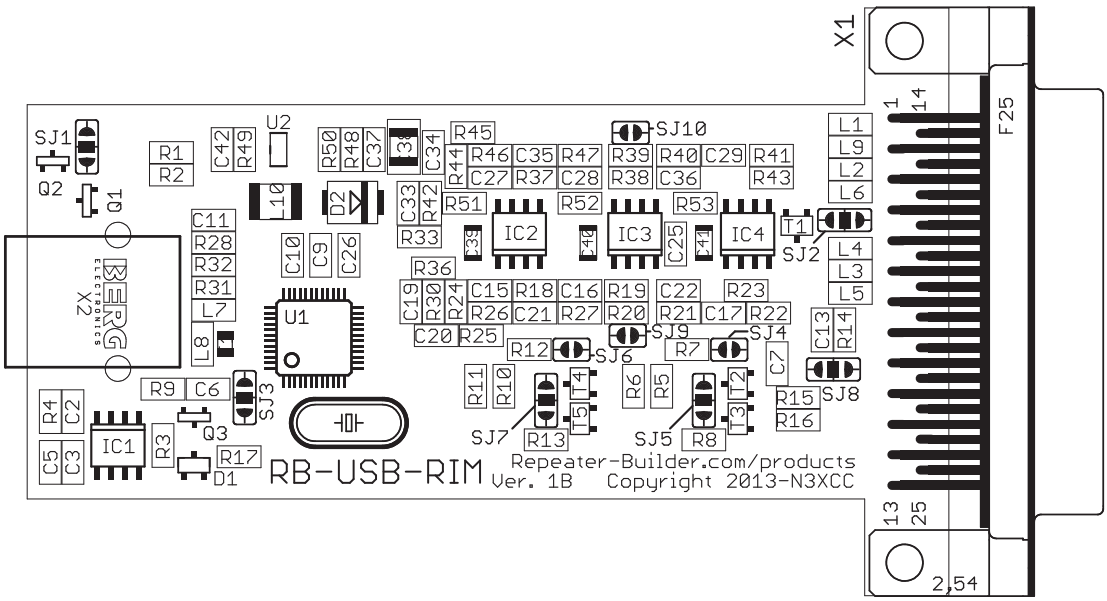
X1
F25
1
14
13
25
2,54
SJ1
Q2
Q1
R1
R2
C42
R49
U2
R50
R48
C37
C34
R45
R44
R46
C35
R47
C27
R37
C28
SJ10
R39
R40
C29
R41
R38
C36
R43
L1
L9
L2
L6
L10
D2
C33
R42
R51
R52
R53
IC2
IC3
IC4
T1
SJ2
L4
L3
L5
C11
R28
R32
R31
L7
L8
C10
C9
C26
R33
R36
C19
R30
R24
C15
R18
C16
R19
C22
R23
R26
C21
R27
R20
R21
C17
R22
C20
R25
U1
SJ9
SJ4
C13
R14
R12
SJ6
R7
C7
SJ8
R9
C6
SJ3
R11
R10
T4
T5
R6
R5
T2
T3
R15
R16
R4
C2
C5
C3
IC1
R3
Q3
R17
D1
SJ7
R13
SJ5
R8
RB-USB-RIM
Repeater-Builder.com/products
Ver. 1B
Copyright 2013-N3XCC

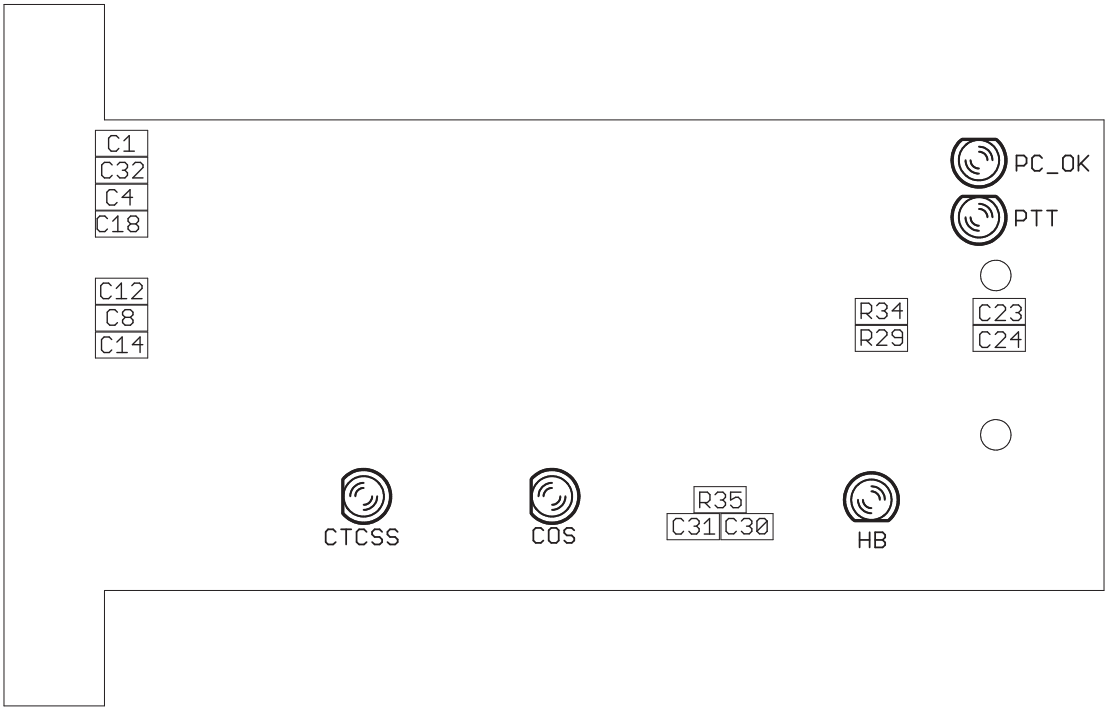
C1
C32
C4
C18
C12
C8
C14
PC_OK
PTT
R34
R29
C23
C24
CTCSS
COS
R35
C31
C30
HB